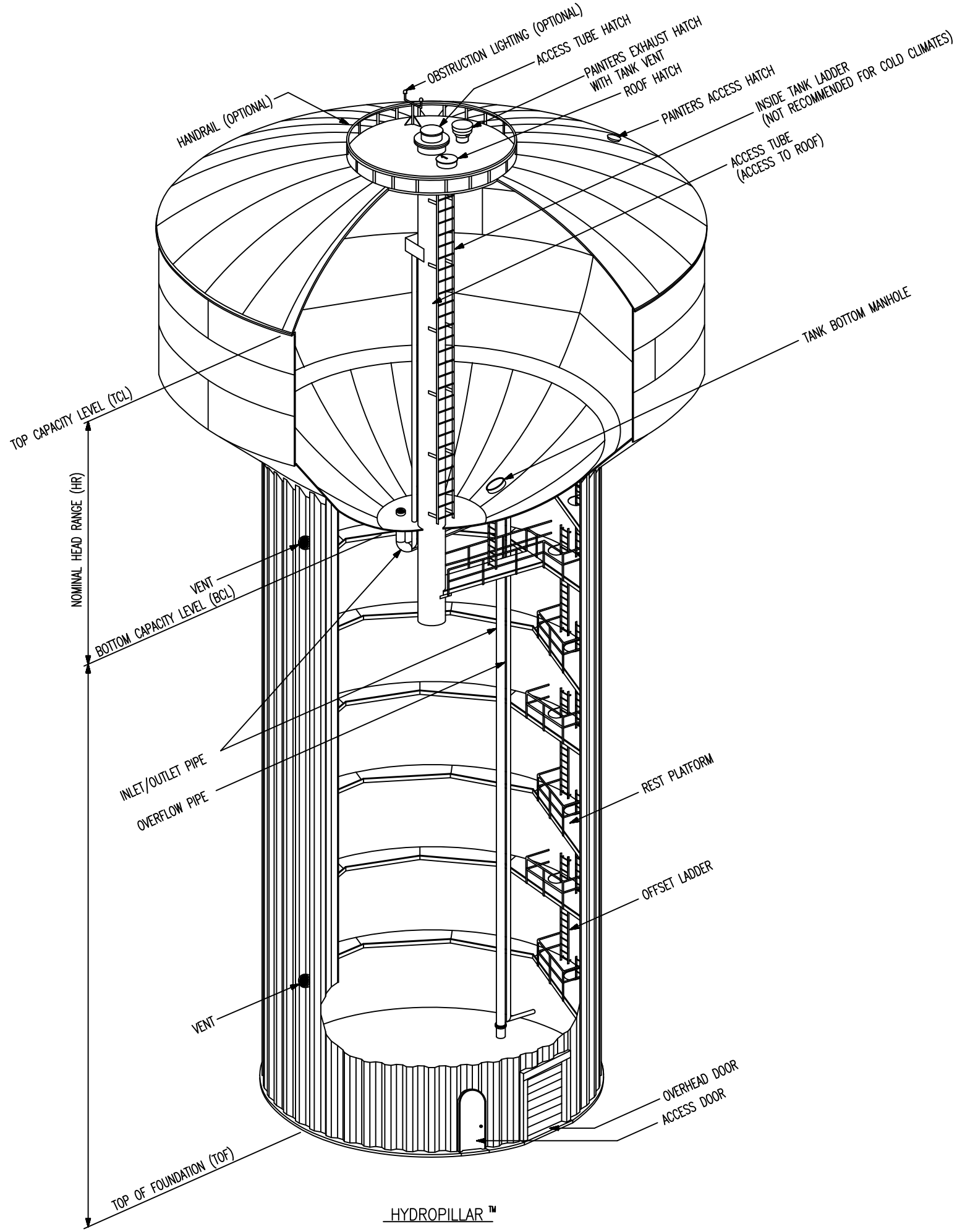

HYDROPILLAR ™

MCDERMOTT

CB&I® STORAGE TANK SOLUTIONS

ELEVATION
ELEVATED WATER STORAGE TANK
HYDROPILLAR ™
_____ GALLON CAPACITY

BY _____ DATE _____	PROJECT NO.	
CHKD _____ DATE _____	DWG. _____	REV. _____

HP-EL-REV1.DGN(JAN/07)

9D1202 REV 1(JAN/07)

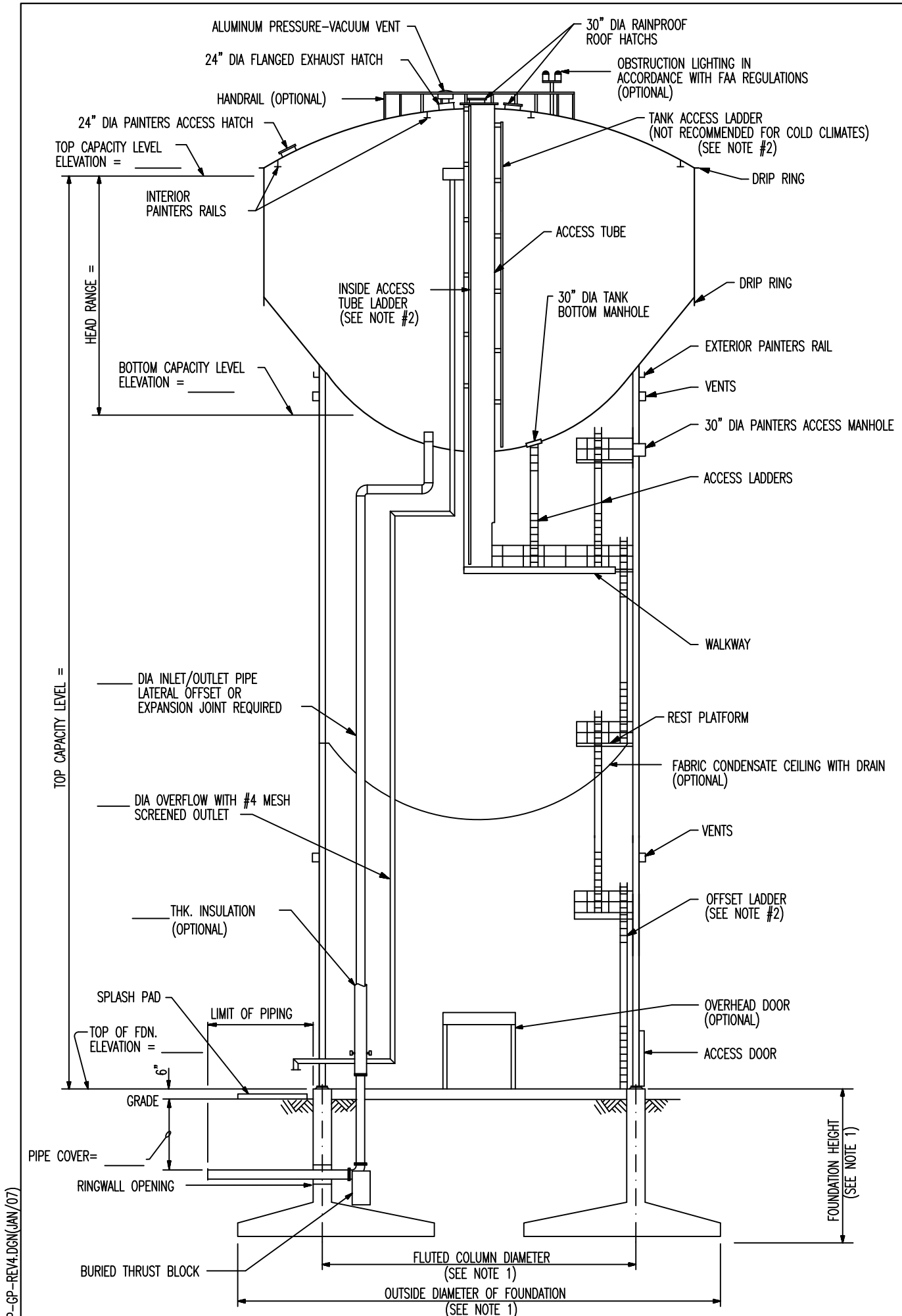

ELEVATION (N.T.S.)

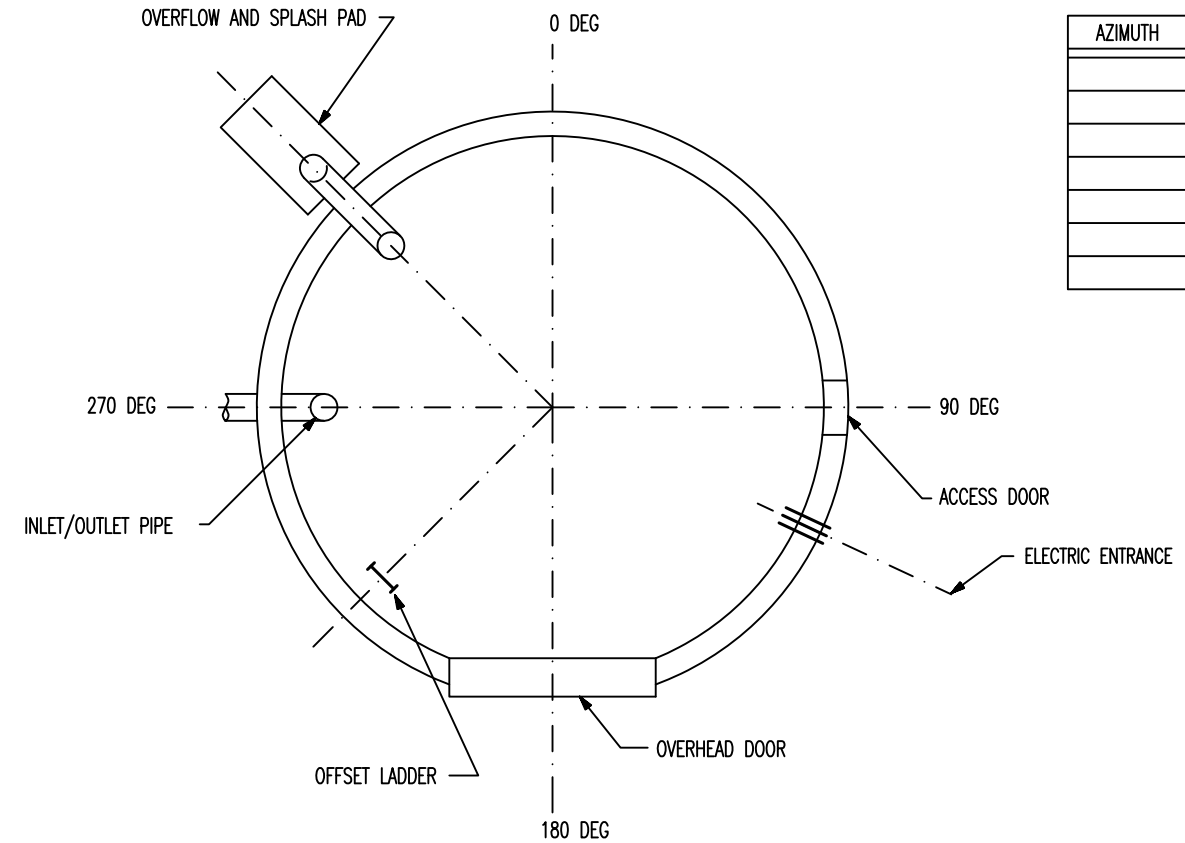

ORIENTATION PLAN

AZIMUTH	DESCRIPTION
	NORTH ARROW
	ELECTRIC ENTRANCE
	OVERFLOW SPLASH PAD
	ACCESS DOOR
	INLET/OUTLET PIPE
	SIGN/LOGO

GENERAL NOTES

1. FLUTED COLUMN DIAMETER AND DIMENSIONS OF FOUNDATION SHALL BE DETERMINED BY THE TANK CONTRACTOR BASED UPON THE INFORMATION IN THE GEOTECHNICAL REPORT.
2. A GALVANIZED LADDER SAFETY DEVICE MEETING OSHA STANDARDS SHALL BE PROVIDED WHEN REQUIRED.
3. SEE SPECIFICATIONS FOR OPTIONAL ACCESSORIES AND ALTERNATE ITEMS.

MCDERMOTT
CB&I® STORAGE TANK SOLUTIONS

GENERAL PLAN
ELEVATED WATER STORAGE TANK
HYDROPILLAR ™
_____ GALLON CAPACITY

BY _____ DATE _____
CHKD _____ DATE _____
PROJECT NO.
DWG. _____ REV. _____

HP-GP-REV4.DGN(JAN/07)

9D1200 REV 4 (JAN/07)

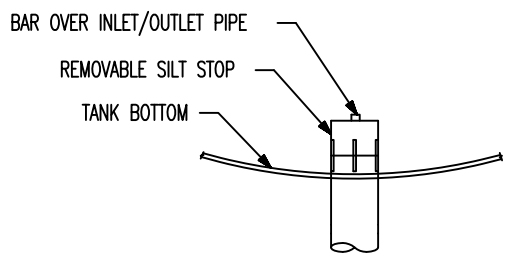

INLET/OUTLET PIPE WITH BAR OVER AND REMOVABLE SILT STOP

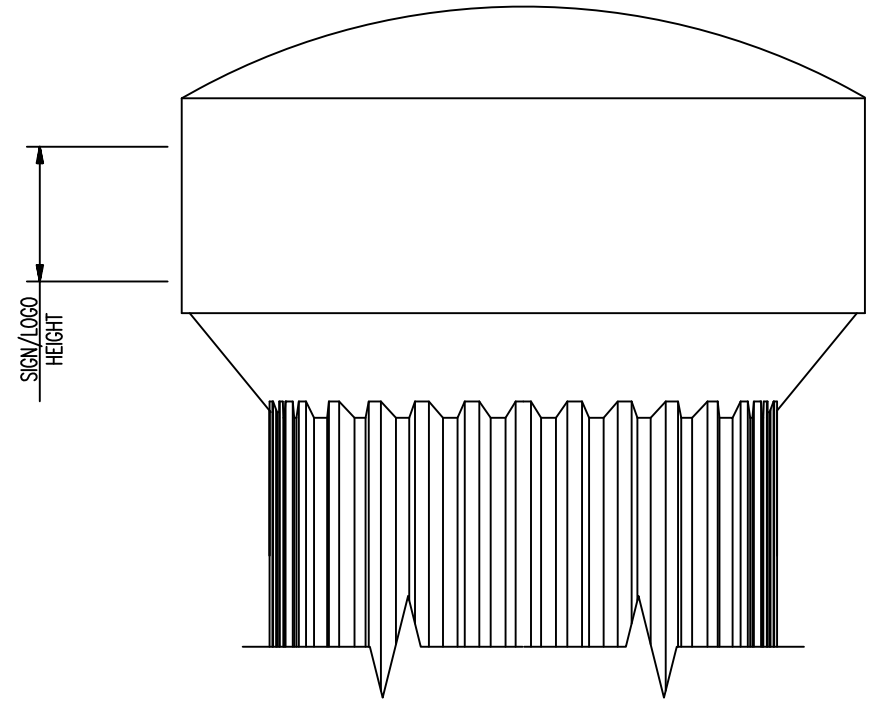

SIGN OR LOGO
(OPTIONAL)

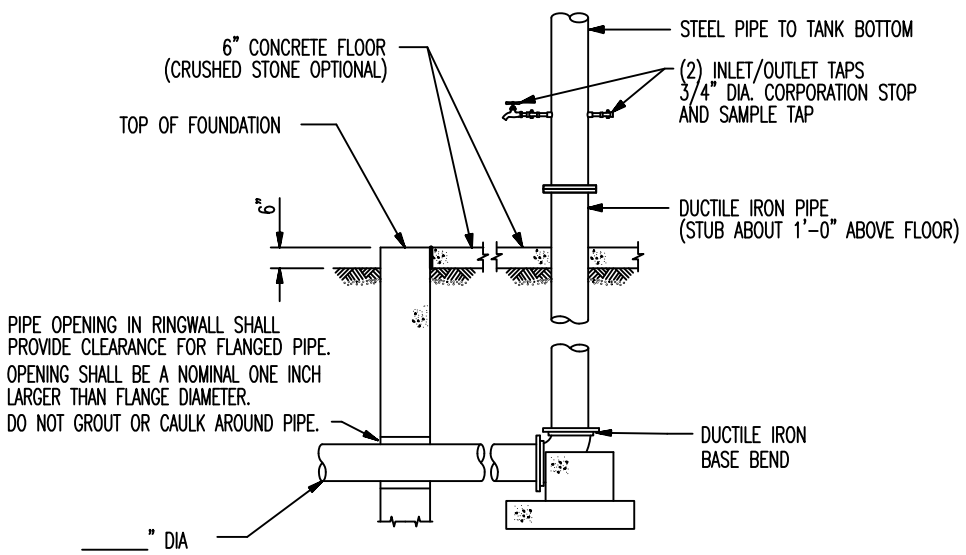

BURIED THRUST BLOCK DETAIL (N.T.S.)

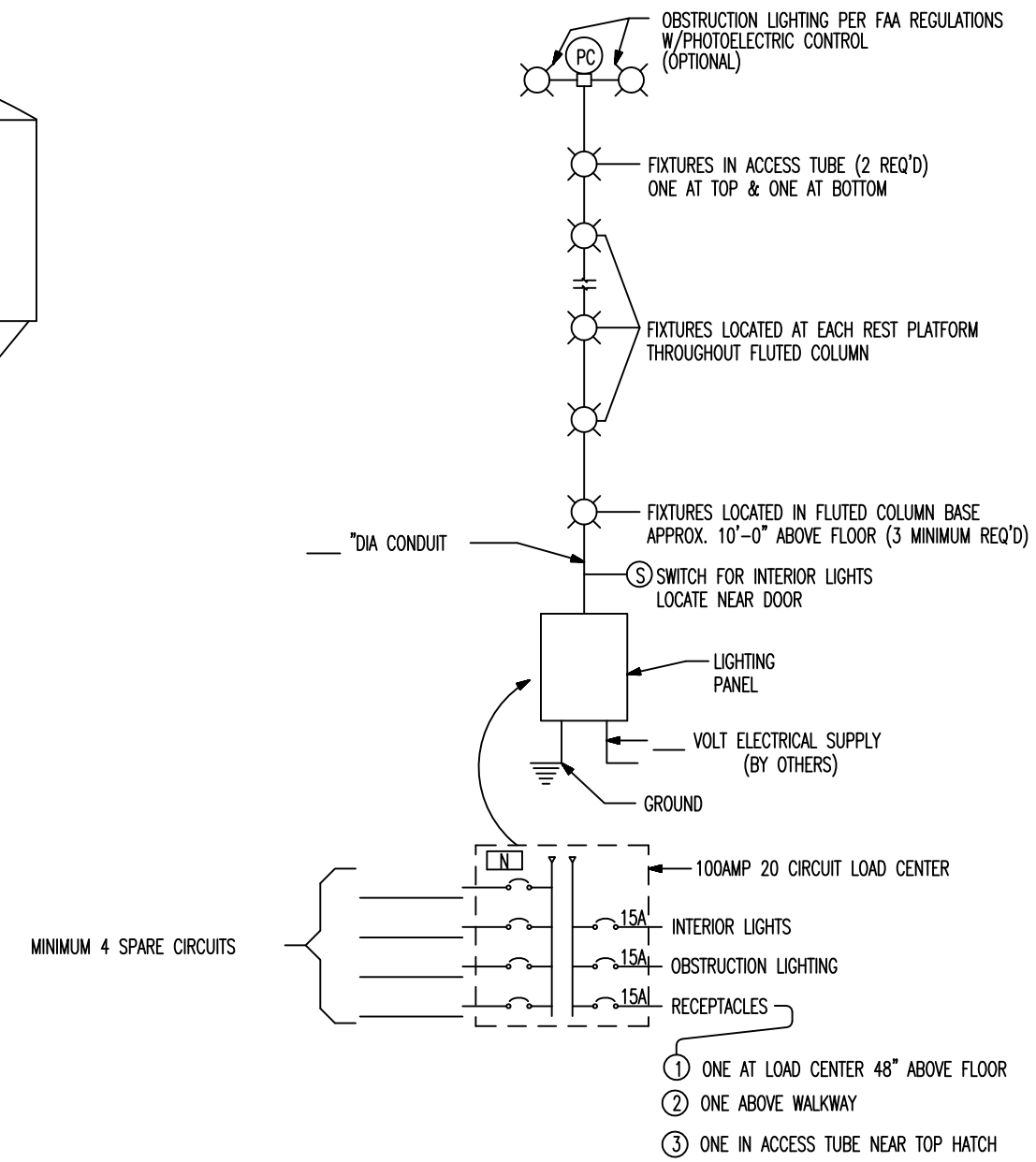

ELECTRICAL SCHEMATIC

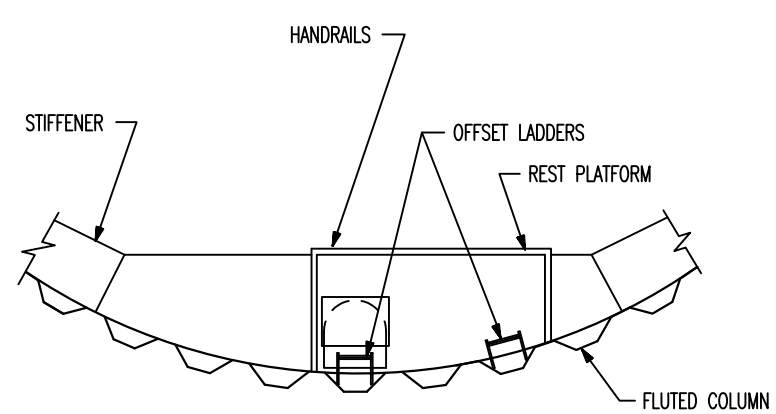

TYPICAL PLAN OF OFFSET LADDERS
AND REST PLATFORM

MCDERMOTT
CB&I® STORAGE TANK SOLUTIONS

DETAILS
ELEVATED WATER STORAGE TANK
HYDROPILLAR ™
_____ GALLON CAPACITY

BY _____ DATE _____	PROJECT NO.	
CHKD _____ DATE _____	DWG. _____	REV. _____

HP-DTL-REV4.DGN(JAN/07)

9D1201 REV 4 (JAN/07)